Replace all references to "Mobile Studio" with NI myDAQ

# Lab 7—Power-Factor Correction

## Purpose

This lab continues the work on a-c power of Lab 6 to demonstrate the effects of improving the power factor.

## Deliverables

The result of this lab is the completed table on the hand-in page plus an explanation of the value of improving the power factor.

## Equipment

You'll need the same equipment as Lab 6 and will build the same circuit. You'll also need the scaled-up results (middle column) from Lab 6.

## Procedure

1. Build the circuit of Fig. 2 of Lab 6. (The same figure is reproduced below.)
2. Adjust the power factor by adding capacitance to the load as shown in Fig. 1:
   - Improve the power factor to at least 90% but not more than 96% lagging.
   - You may calculate the required value or you may do this by trial-and-error.
   - Don't make the power factor leading!
   - Be sure to readjust the load voltage to 1.0 $V_{RMS}$ after adding the capacitor.
3. As you did in Lab 6, collect the data needed to complete the first column on the hand-in page.
4. Do all the calculations to complete the remaining blanks in the table.
5. Using your data, answer on the hand-in page the question about the value of this improvement.

## Finishing

Complete the hand-in page and turn it in by the end of the lab session.

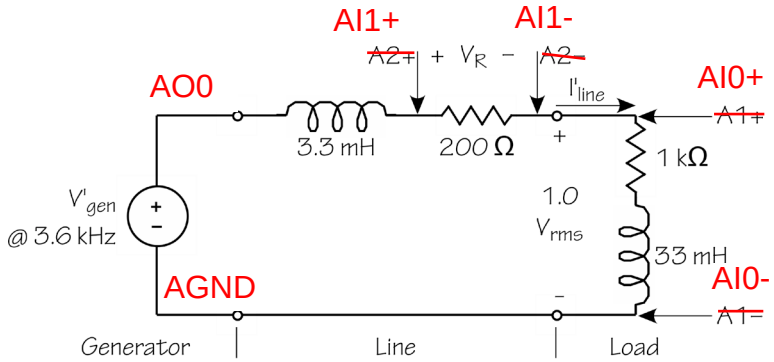


Fig. 1–Scaled power system with MSD

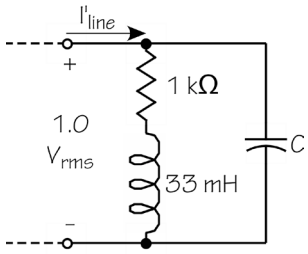


Fig. 2–Load from Lab 6

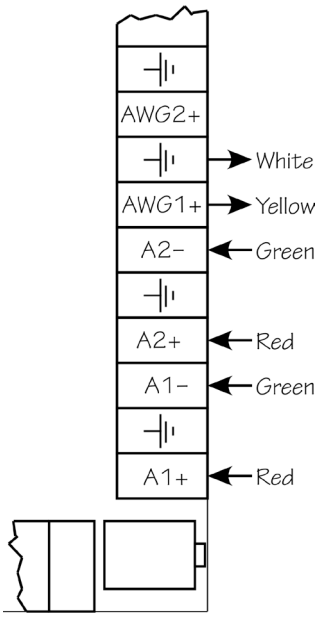


Fig. 3–Red2 terminals

$$p(t) = v(t)i(t)$$

$$P_{av} = |V_{RMS}||I_{RMS}|\cos(\theta_V - \theta_I) = |V_{RMS}||I_{RMS}|pf$$

$$pf = \cos(\theta_V - \theta_I)$$

$$Q_{av} = |V_{RMS}||I_{RMS}|\sin(\theta_V - \theta_I)$$

$$S = VI^* = P + jQ$$

$$pf = \frac{P_{AV}}{|S|}$$

$$\%\eta = \frac{P_{load}}{P_{source}}100$$

$$\%VR = \frac{|V_{source}| - |V_{load}|}{|V_{load}|}100$$

Turn in this page with all required data, calculations, and discussion by the deadline given in the lab instructions.

By _____

_____

_____

Date _____ Bench # _____

**Results after power-factor correction:**

Power factor improved to _____ Capacitance added in parallel _____

| | Simulation results | Simulation results scaled up | Results from Lab 6 |
|---|---|---|---|
| $V_{load}$ (phasor, 0°) | V | V | V |
| $I_{line}$ (phasor) | mA | A | A |
| $V_{gen}$ (phasor) | V | V | V |
| Power factor | | | |
| $P_{load}$ | μW | kW | kW |
| $Q_{load}$ | μVAR | kVAR | kVAR |
| $S_{load}$ | μVA | kVA | kVA |
| $P_{line\ loss}$ | μW | kW | kW |
| % efficiency | % | % | % |
| % voltage regulation | % | % | % |

**What has been the good effect of the increased power factor?**
**Use the data you have collected to justify your answer.**