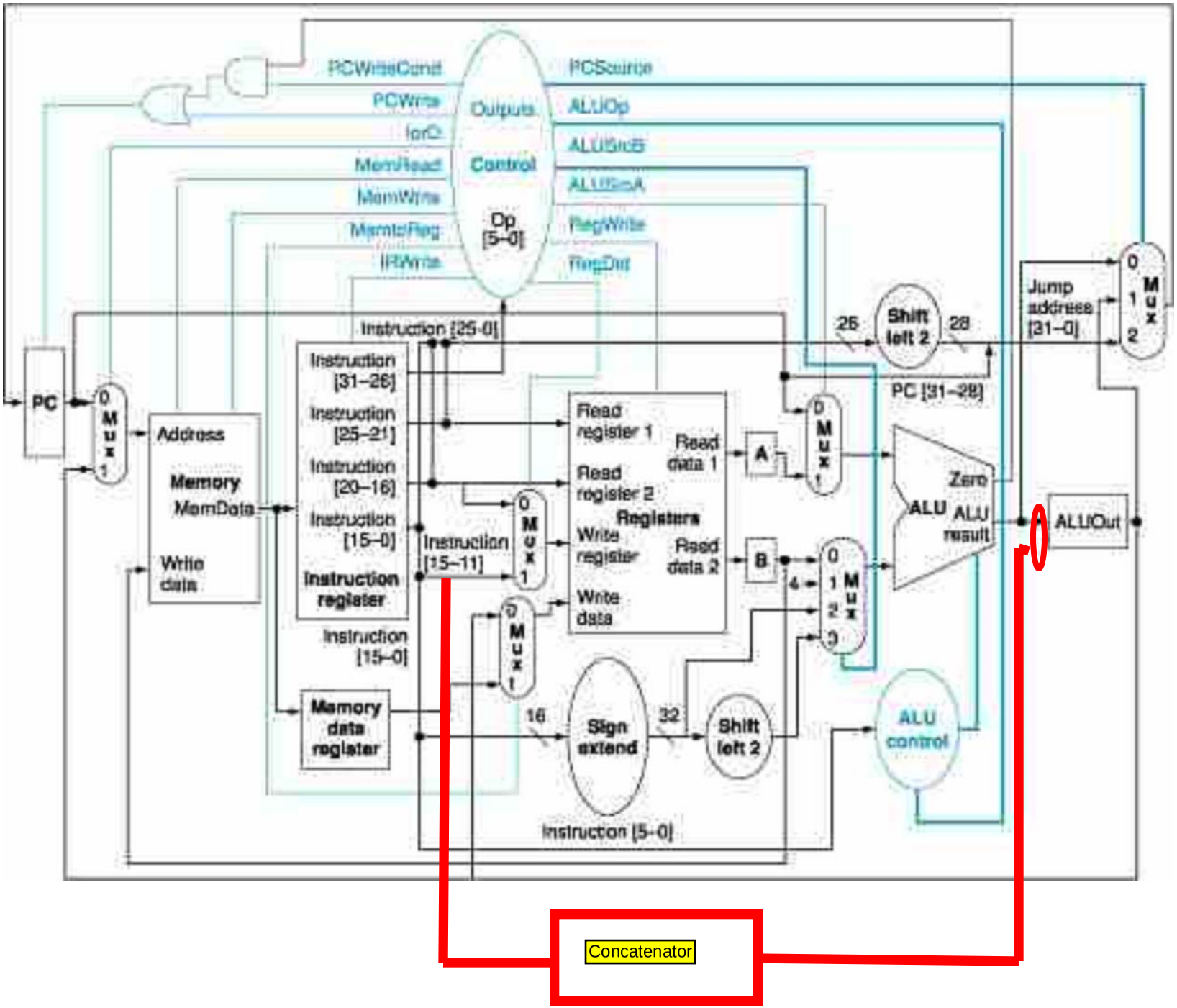
PCWriteCond
PCWrite
IorD
MemRead
MemWrite
MemtoReg
IRWrite
Outputs
Control
Op [5–0]
PCSource
ALUOp
ALUSrcB
ALUSrcA
RegWrite
RegDst
PC
Address
Memory
MemData
Write data
Instruction [31–26]
Instruction [25–21]
Instruction [20–16]
Instruction [15–0]
Instruction register
Instruction [15–0]
Memory data register
Instruction [25–0]
Instruction [15–11]
Read register 1
Read register 2
Registers
Write register
Write data
Read data 1
Read data 2
A
B
4
16
Sign extend
32
Shift left 2
Instruction [5–0]
26
Shift left 2
28
PC [31–28]
Jump address [31–0]
ALU
Zero
ALU result
ALUOut
ALU control
Concatenator