Name _____ CM _____ Section _____

ME430 - Mechatronics
Examination I
Sept 24th, 2015

Problem	Score	
1	/ 18	
2	/ 12	
3	/ 17	
4	/ 12	
5	/ 6	
6	/ 15	
7	code	check off
	/ 18	/2
Total	/100	

You may use only:

- Your computer
- Any paper notes (such as notes on the videos) you brought to the exam, so long as those notes were written by you or your lab partner.
- Any electronic notes or code residing on your local (C:) hard drive, so long as those notes/code were written by you or your lab partner.
- The course website. (This is the only approved use of the internet for this exam.)
- A calculator (optional).
- Moodle for code submission.

Anything not specifically allowed is prohibited. In particular, you may not use notes or code written by someone outside your lab group.

Reference

This diagram can also be found on the course website. It is copied here as a reference.

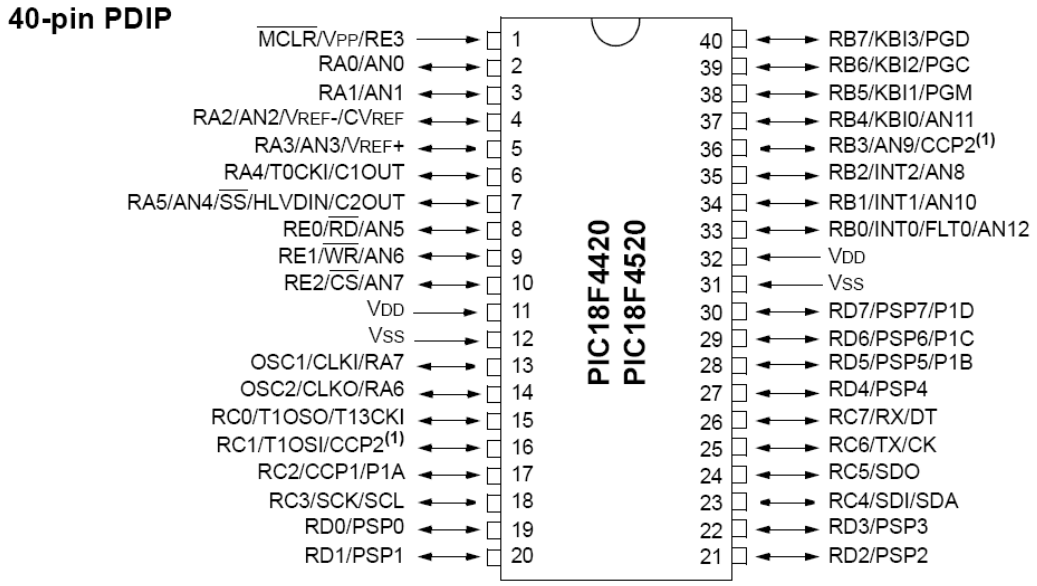

Problem 1 – Number systems

We just invented a new integer variable type. It's 7 bits, it uses two complement notation for negative numbers, and it's called a **wow**. You can have an **unsigned wow** and a **signed wow** (signed is the default if not specified). Below we have some code using our wow variable type. What is printed for each print statement?

```
wow a = 70;
printf("a = %d\n", a);
```

```
unsigned wow b = 70;
printf("b = %d\n", b);
```

```
wow c = 700;
printf("c = %d\n", c);
```

What binary bits are stored in memory for the a, b, and c **wow** variables?

a

b

c

What are the min and max sizes for a **wow**?

unsigned wow min value

unsigned wow max value

signed wow min value

signed wow max value

Problem 2 – Variable types

What is the decimal value result for each operation? As much as possible show your work below each line and put your final answer in the box.

	Decimal value
char **a** = (2015 / 100) % 10;	
char **b** = 3 << 2;	
char **c** = 'M' + 1;	
char **d** = 4.5 / 2;	
char **e** = 0x0A | 3;	
char **f** = 0b0111 & 9;	

Problem 3 – Darlington Motor:

Shown below you will find a 6.3 volt power source, a voltage regulator, two pushbuttons, an 18F4520 (labelled as just IC, but it's a PIC), a Darlington, and a DC motor. Assume the PIC is already programmed such that it expects separate pushbutton circuits connected to RA2 and RA3. If both are pressed it will send a signal to the Darlington to turn on the motor via RB4. Using best practice in electrical design to make ALL the connections needed to drive this circuit. Connect wires between the components below and add resistors, capacitors, and diodes as necessary. Make sure to label resistor and capacitor values.

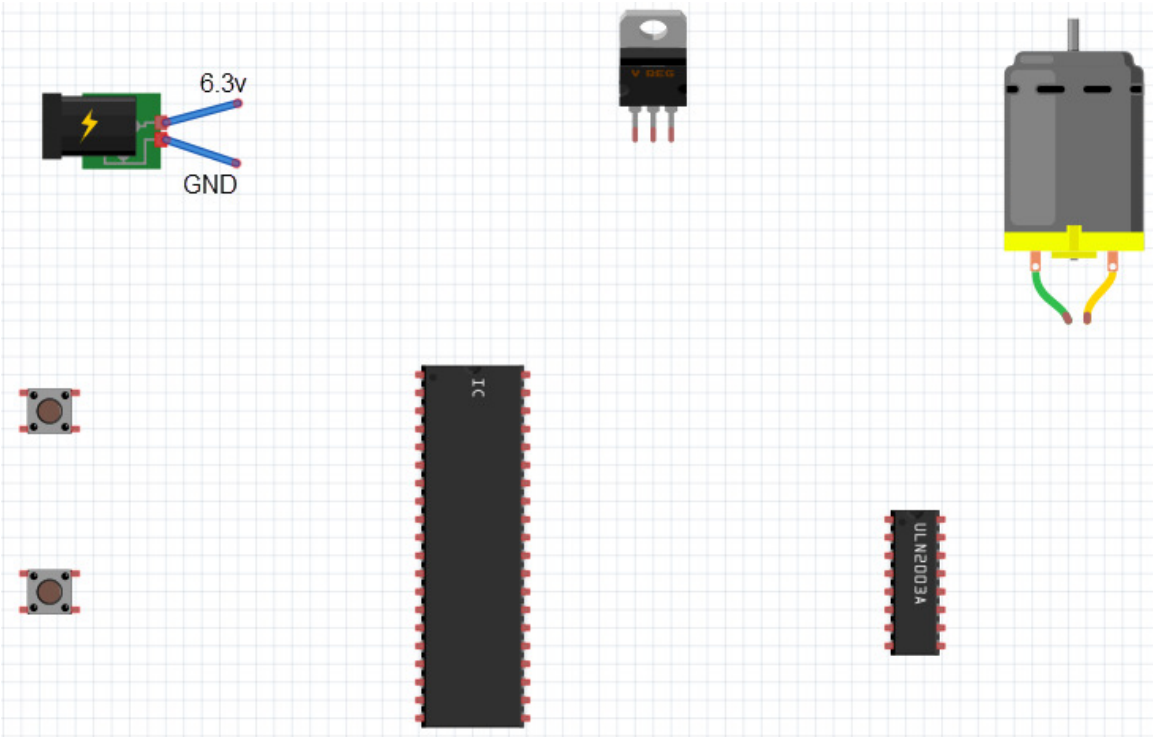

Problem 4 – BJT resistor sizing

Assume that you have a PIC (not shown) that you want to use to control an NPN BJT to drive a motor. The current limiting resistor, that you need to connect between the PIC (which is not show) and the BJT, needs to be sized. Connect wires to the components below to build the circuit and add capacitors and diodes as necessary. If the resistance of the motor is 100 ohms what size should the resistor be?

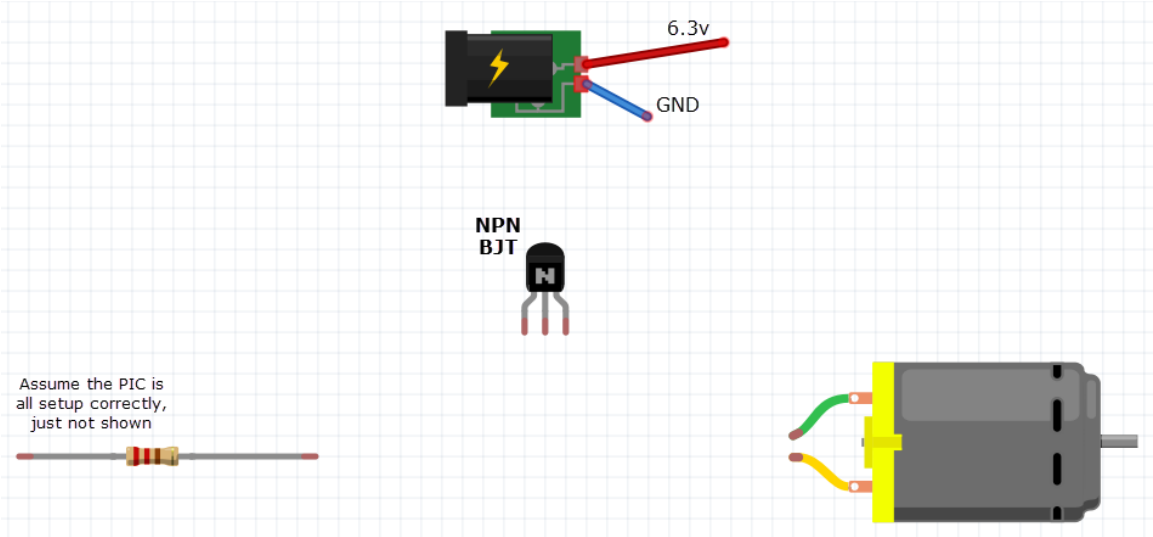

Show your work

Exact resistor value calculated

Real resistor size if forced to pick from the E12 series.

Problem 5 – Resistor sizing

The circuit below uses a 3.0v power supply (via two 1.5 volt batteries) to drive 2 LEDs in series (the circuit is correct to light the LEDs). Each LED has a 0.9 volt forward voltage drop. What size does the resistor need to be to get 10mA of current going through the LEDs?

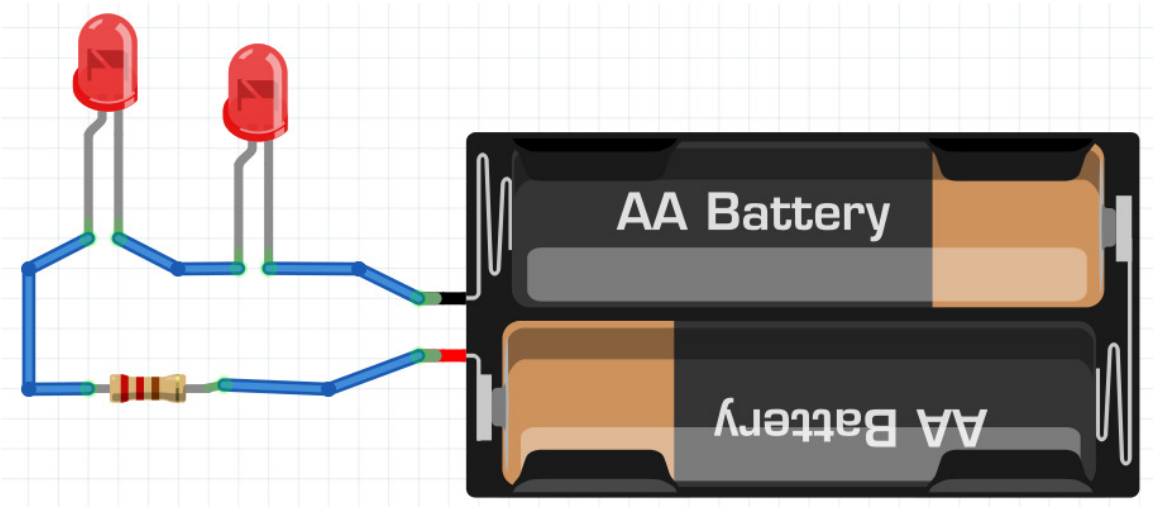

Show your work

Exact resistor value calculated

Real resistor size if forced to pick from only <u>E6</u> options

Problem 6 – C debugging

a. Consider the code scrap shown below. There are 2 lines that cause syntax errors that would not let this code compile. Mark the corrections on the code below.

```
#include <stdio.h>

void main() {
    char a = 9;
    char b = 3

    while a > b {
        b = b + 3;
    }

    printf("a = %d\n", a);
    printf("b = %d\n", b);

    if (b = a) {
        b = a * a;
        a = 0;
    }

    printf("a = %d\n", a);
    printf("b = %d\n", b);

    while (1) {

    }
}
```

b. Additionally there is one line that is not a syntax error, but IS an error made by the programmer. Mark the correction above.

c. If the three lines were fixed and the code was run, what would print?

Problem 7 – C Programming

Create a new project in MPLABx that uses the Simulator. Starting from template.c, create a file called "lastname_firstname.c".

In that file, write a for loop that will iterate from 400 to 499. For each value in the loop determine if it is a multiple of 12. If it IS a multiple of 12 then increment a counter to record that you've found a matching value and add that value to an accumulator so that you can calculate the sum of all matches. Finally print out the number of matching values and the sum of those values to the UART1 window as shown below.

Recall: You learned to enable the UART1 window in the day 4 lecture "Intro to MPLABx", "Hello World Program". (http://www.rosebotics.org/me430/unit?unit=4&lesson=2)

Your output should look like this:

```
There were 8 multiples of 12 found, which sum 3600.
```

You are required to use a for loop to solve this problem and will receive no credit for hardcoded solutions. Your printf statement should use this template to generate the output shown above.

```
There were %d multiples of 12 found, which sum %d.
```

When you complete this problem and have it running, call your instructor over to check it off on the front sheet.

Regardless of whether you finish or not, submit your code into the Moodle dropbox (just the *.c file).