Name _____ CM _____ Section _____

ME430 - Mechatronics
Examination I – Computer Portion
September 24, 2013

Problem	Score
3	/ 30
4	/ 30
5	/ 20
Total	/ 80

For the computer portion of the exam, you may use only:

- Your computer
- Any paper notes (such as notes on the videos) you brought to the exam, so long as those notes were written by you or your lab partner.
- Any electronic notes or code residing on your local (C:) hard drive, so long as those notes/code were written by you or your lab partner.
- The course website. (This is the only approved use of the internet for this exam.)
- A calculator (optional).
- Email for code submission.

Anything not specifically allowed is prohibited. In particular, you may not use notes or code written by someone outside your lab group.

Problem 3 – H-Bridge:

Below you will find a 6.3 volt power source connected on the top rail, a voltage regulator, 3 switches, an H-Bridge, and a motor.

- Connect the voltage regulator (making a 5 volt rail on bottom)
- Connect a basic switch circuit from pushbutton 1 that controls the enable line for the top side of the H-Bridge.
- Use the other 2 switches to create basic switch circuits that control the **inputs** on the top side of the H-Bridge.
- Connect other H-Bridge pins as appropriate.
- Connect the motor to the outputs of the top side of the H-bridge.
- Add snubber diodes, decoupling capacitors, and size all resistors.

~~Note that, if we actually built this circuit, it would rotate the motor in one direction when pushbuttons 1 & 2 were pressed and it would rotate the motor in the other direction when pushbuttons 1 & 3 were pressed.~~ You will need to draw the resistors, caps, and snubbers, but don't redraw any other components: connect to the ones shown. For wire connections on the board draw solid circles at the connection points. For example:

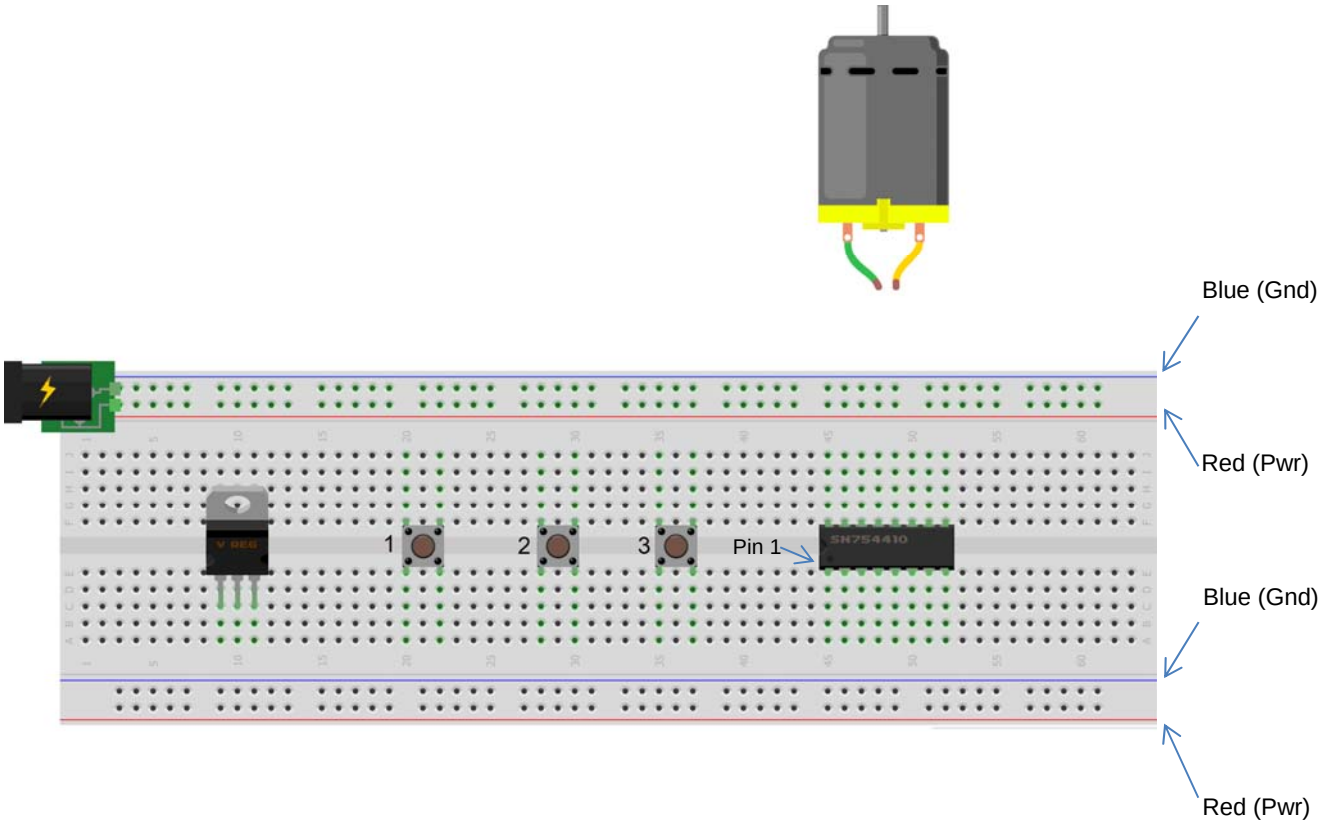

Problem 4 – Transistors:

Below are three LEDs just like we have in class. Assume that the right-hand-side leads are the + leads (anodes) on the LEDs.

- Connect one LED to the BJT shown and control it from RB2. Connect the rest of the BJT as appropriate.
- Connect the next LED to the MOSFET shown and control it from RB1. Connect the rest of the MOSFET as appropriate.
- Connect the last LED to the Darlington shown and control it from RB0. Connect the rest of the Darlington as appropriate.
- Connect the PIC's power, ground, and MCLR lines.

Notes: You don't need to draw a voltage regulator but label the power source symbols you add as "5V reg" or "5V unreg". When you draw in a resistor you must label its value (pick a **real** resistor value). You don't need to draw caps, snubbers (these are LEDs!), or switches.

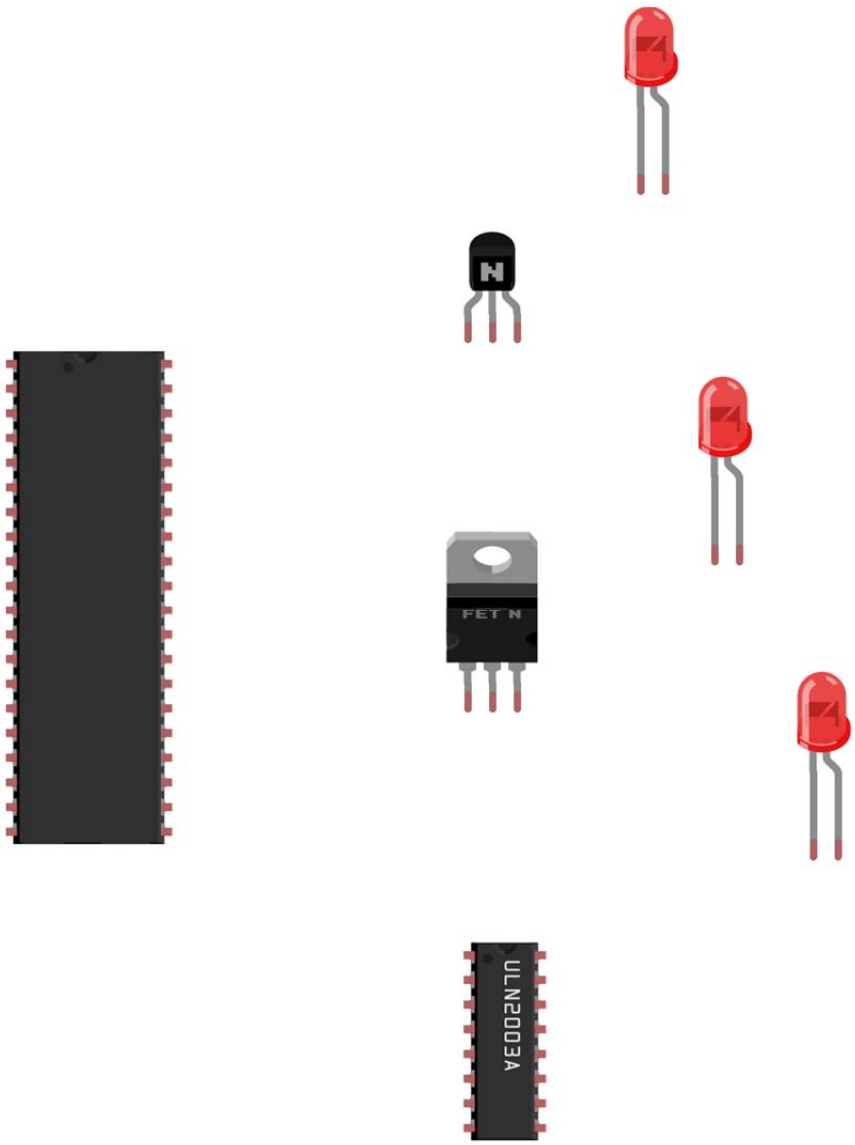

Problem 5 – Simple C

Create a new project in MPLABx that uses the Simulator. Starting from template.c, create a file called "lastname_firstname.c". Within the main function ***USE A LOOP*** to print

```
 5 Hello World
 4 Hello World
 3 Hello World
 2 Hello World
 1 Hello World
 0 Hello World
```

to the Simulator **`UART1 Output`** window. This should print exactly once when you run the program. You must use either a `for` loop or a `while` loop to accomplish this task or you will not receive credit for this problem.

Note that if the simulator window prints instead:

```
  Hello World
 4 Hello World
 3 Hello World
 2 Hello World
 1 Hello World
 0 Hello World
```

then you may want to right click to clear the UART1 Output, and then rerun the code. (It is a common MPLABx bug to mess up the first character printed. It happens once per program.)

Regardless of whether you finish or not, email your finished code (just the *.c file) to your instructor.