ECE 351 Lab V
Darlington Push-Pull Amplifier

In this lab we will construct and test the differential amplifier designed in the homework. **Make sure that you use heat sinks for the power transistors.**

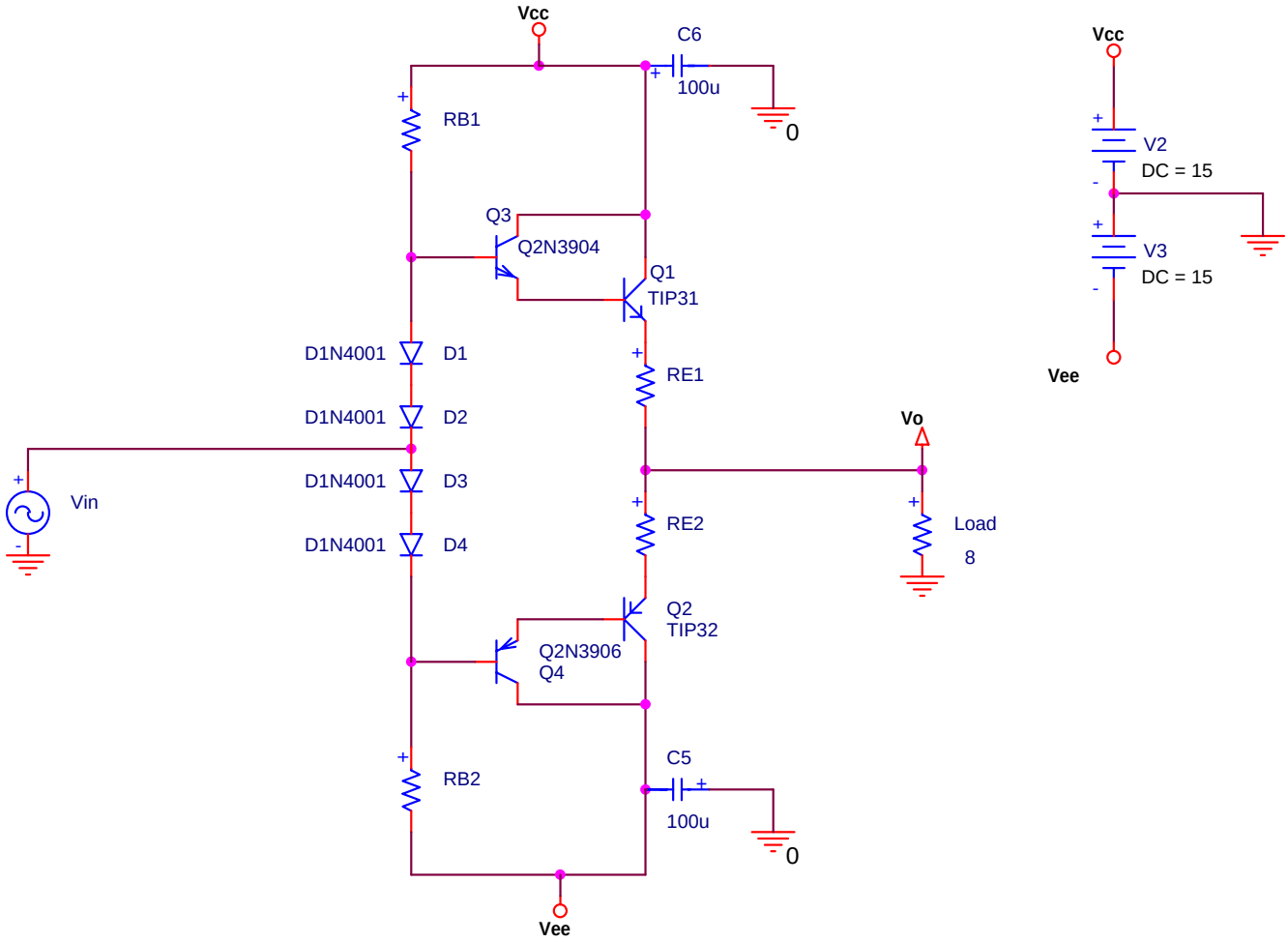

V.A. Pre-Lab

- Include design calculations for the following items:
  - The values of all components.
  - The power delivered to the load.
  - The power dissipated by each component in your circuit. (Why should you calculate the power dissipation?)
- Perform the following PSpice simulations:
  - A bias-point analysis to display the DC voltages of your circuit when the input is zero. This simulation should show the bias voltage of every node in the circuit. Create a table and record these values.

- A transient analysis that shows that your amplifier can deliver a sinusoidal current with an amplitude of 1 A to an 8 Ω load.

V.B. Lab Measurement

- **Make sure that you place heat sinks of your TIP 31 and TIP 32 transistors.**

- Wire up your circuit and ground the input. Do not hook up a load. Apply power and observe the supply current. Is the supply current stable or does it slowly increase? Observe the supply current for a few minutes. If the supply current is stable, you may continue. If you see the supply current slowly increase, you will need to make the emitter resistors larger.

- If your supply current is stable, measure the DC voltage at every node in the circuit and compare the values to those found by PSpice. Record these values in the table you created for the PSpice results.

- If your measured bias voltages agree with those obtained from PSpice, you can test your amplifier with an AC waveform. Do not hook up the load. Use the signal generator to apply a 1 kHz sine wave to the input of your amplifier. This input should not have a DC offset. Observe the output and verify that it follows the input. Test your amplifier for input amplitudes from 1 V_{pp} to 20 V_{pp}.

- If you are able to obtain an undistorted 20 V_{pp} sine wave at the output with no load, you may now add the 8 Ω load to the output. Start with a small input and verify the output of your amplifier. Slowly increase the input and observe the output to verify that your amplifier is still working correctly.

  - If your amplifier clips at higher power, you may need to reduce the resistance of your base resistors.

  - Your power transistors may get hot. Make sure that you use a heat sink.

  - When you obtain a sinusoidal waveform at full power, demonstrate your circuit to me.

V.C. Audio Amplifier

Wire the circuit on the next page to demonstrate your power amplifier with an 8 Ω speaker and a signal source such as a CD player or a tape player. You will need to provide the audio source. **Before using your expensive audio source and speaker, you should test your circuit first with a resistor and signal generator.**

(If you use your PC as the audio source, run your PC on the batteries only.)

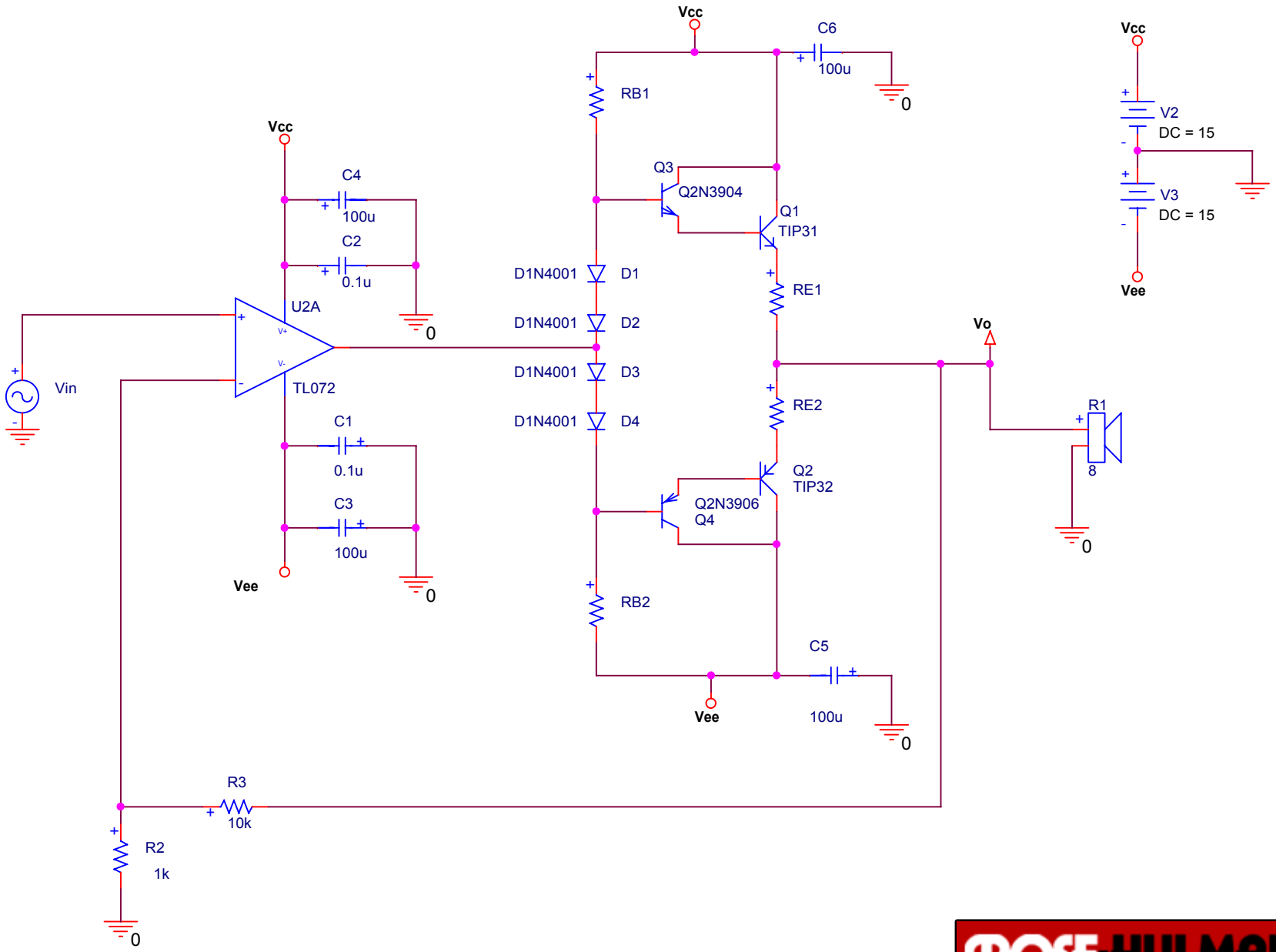

ROSE-HULMAN INSTITUTE OF TECHNOLOGY
ECE Department
5500 Wabash Avenue
Terre Haute, IN 47803
Ph: (812) 877-8512
FAX: (253) 369-9536

Name: Marc E. Herniter	Class: ECE 351	
Size A	Document Name Audio Power Amplifier	Rev 1
Date: Friday, January 18, 2002	Sheet 1 of 1	